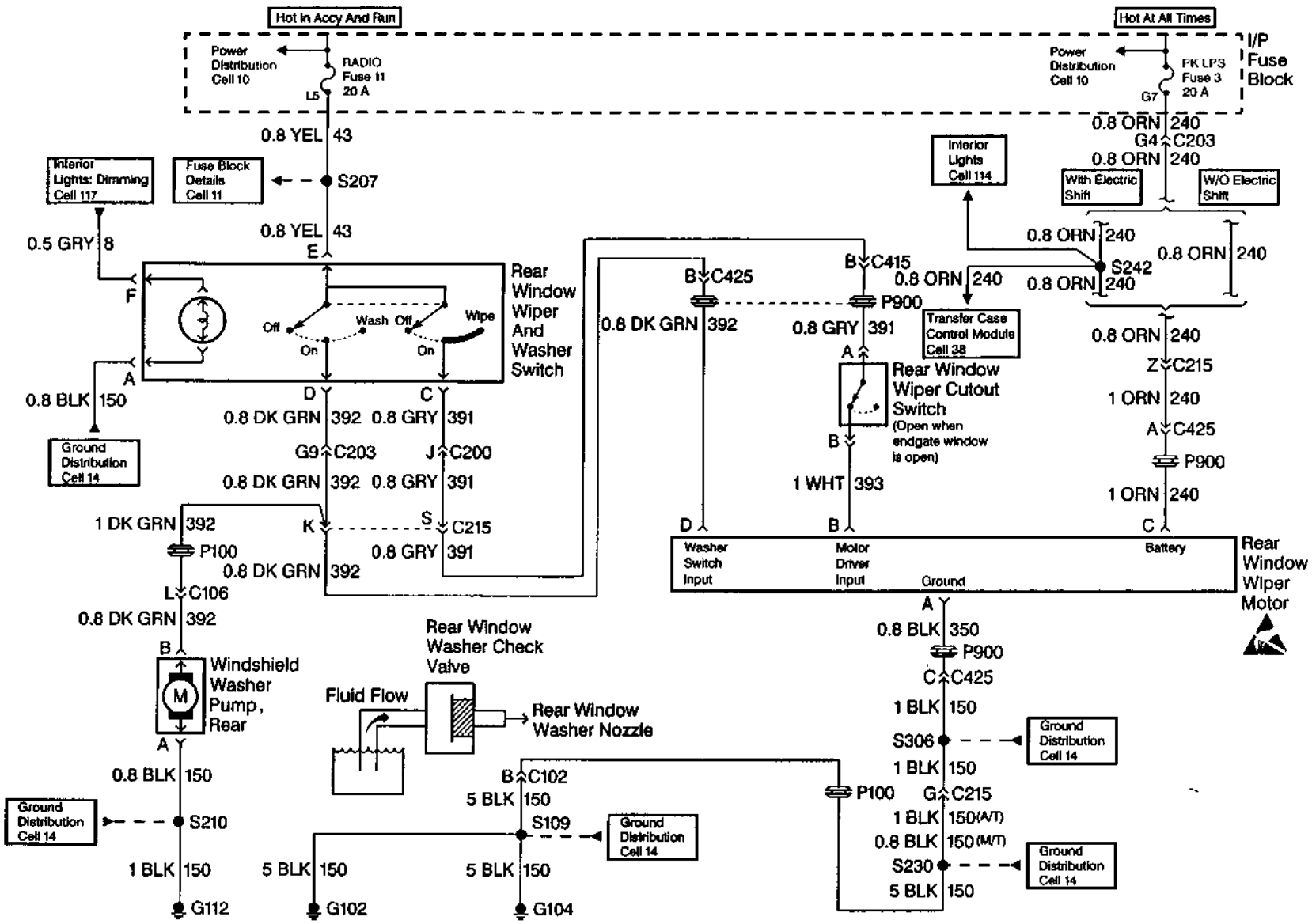
Hot In Accy And Run
Hot At All Times
I/P Fuse Block
Power Distribution Cell 10
RADIO Fuse 11 20 A
L5
PK LPS Fuse 3 20 A
G7
0.8 YEL 43
S207
Interior Lights: Dimming Cell 117
Fuse Block Details Cell 11
0.5 GRY 8
E
F
A
Off
On
Wash
Off
On
Wipe
Rear Window Wiper And Washer Switch
0.8 BLK 150
Ground Distribution Cell 14
D
C
0.8 DK GRN 392
0.8 GRY 391
G9 C203
J C200
1 DK GRN 392
K
S
C215
P100
L C106
B
Windshield Washer Pump, Rear
M
S210
1 BLK 150
G112
Rear Window Washer Check Valve
Fluid Flow
Rear Window Washer Nozzle
B C102
5 BLK 150
S109
G102
G104
B C425
P900
B C415
0.8 ORN 240
G4 C203
With Electric Shift
W/O Electric Shift
Interior Lights Cell 114
S242
Transfer Case Control Module Cell 38
Rear Window Wiper Cutout Switch
(Open when endgate window is open)
1 WHT 393
Z C215
1 ORN 240
A C425
Washer Switch Input
Motor Driver Input
Ground
Battery
Rear Window Wiper Motor
0.8 BLK 350
S306
S230
1 BLK 150(A/T)
0.8 BLK 150(M/T)