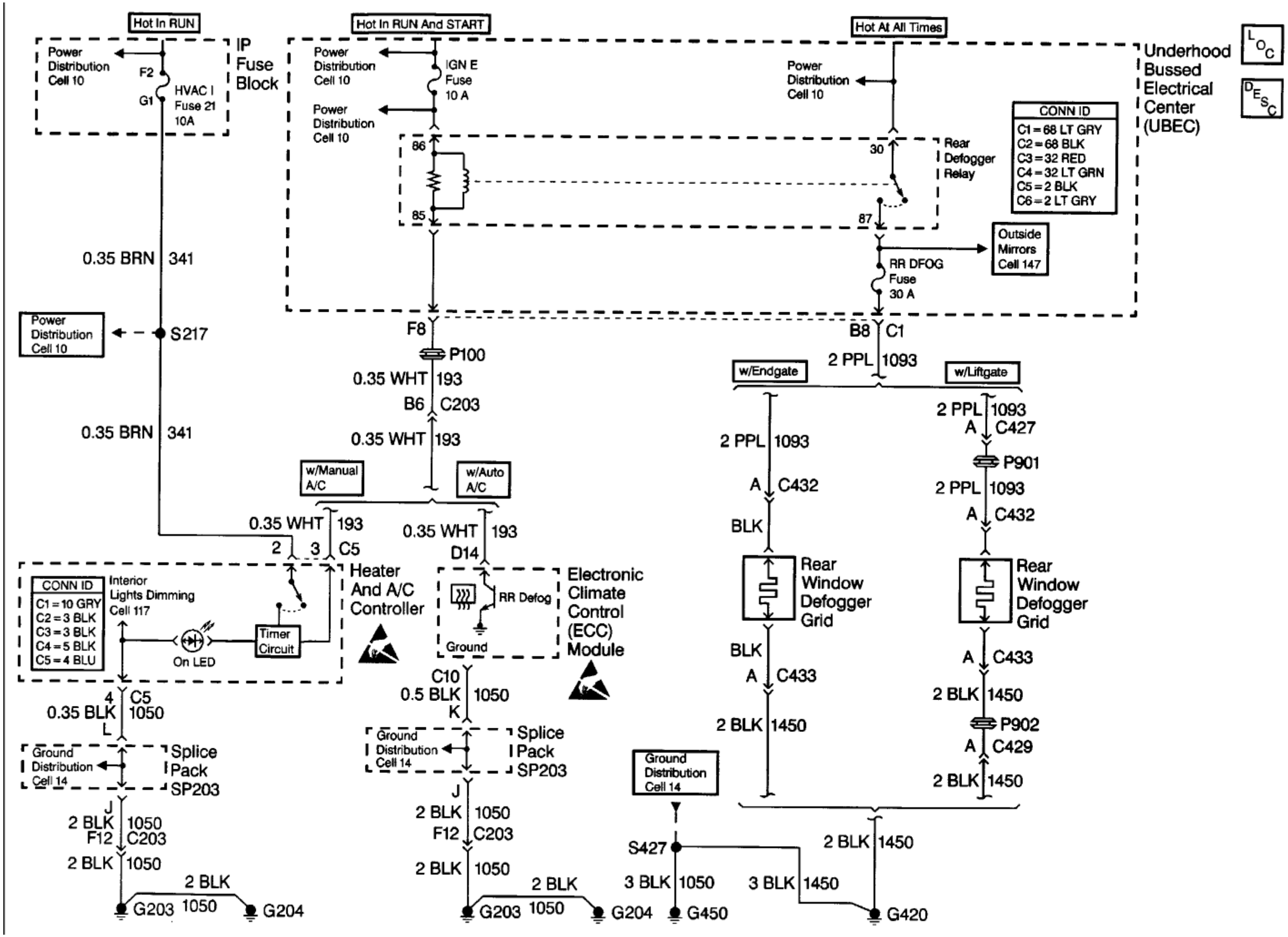
Hot In RUN
Power Distribution Cell 10
F2
G1
HVAC I Fuse 21 10A
IP Fuse Block
Hot In RUN And START
Power Distribution Cell 10
IGN E Fuse 10 A
Power Distribution Cell 10
86
85
Hot At All Times
Power Distribution Cell 10
30
87
Rear Defogger Relay
Underhood Bussed Electrical Center (UBEC)
CONN ID
C1 = 68 LT GRY
C2 = 68 BLK
C3 = 32 RED
C4 = 32 LT GRN
C5 = 2 BLK
C6 = 2 LT GRY
Outside Mirrors Cell 147
RR DFOG Fuse 30 A
0.35 BRN 341
Power Distribution Cell 10
S217
F8
P100
0.35 WHT 193
B6 C203
0.35 BRN 341
0.35 WHT 193
B8 C1
2 PPL 1093
w/Endgate
w/Liftgate
2 PPL 1093
A C427
P901
2 PPL 1093
A C432
2 PPL 1093
A C432
BLK
Rear Window Defogger Grid
BLK
A C433
2 BLK 1450
A C433
2 BLK 1450
P902
A C429
2 BLK 1450
w/Manual A/C
w/Auto A/C
0.35 WHT 193
2 3 C5
0.35 WHT 193
D14
CONN ID
C1 = 10 GRY
C2 = 3 BLK
C3 = 3 BLK
C4 = 5 BLK
C5 = 4 BLU
Interior Lights Dimming Cell 117
Timer Circuit
On LED
Heater And A/C Controller
RR Defog
Ground
Electronic Climate Control (ECC) Module
4 C5
0.35 BLK 1050
L
C10
0.5 BLK 1050
K
Ground Distribution Cell 14
Splice Pack SP203
Ground Distribution Cell 14
Splice Pack SP203
J
2 BLK 1050
F12 C203
2 BLK 1050
J
2 BLK 1050
F12 C203
2 BLK 1050
2 BLK 1050
G203
G204
2 BLK 1050
G203
G204
Ground Distribution Cell 14
S427
3 BLK 1050
G450
3 BLK 1450
2 BLK 1450
G420