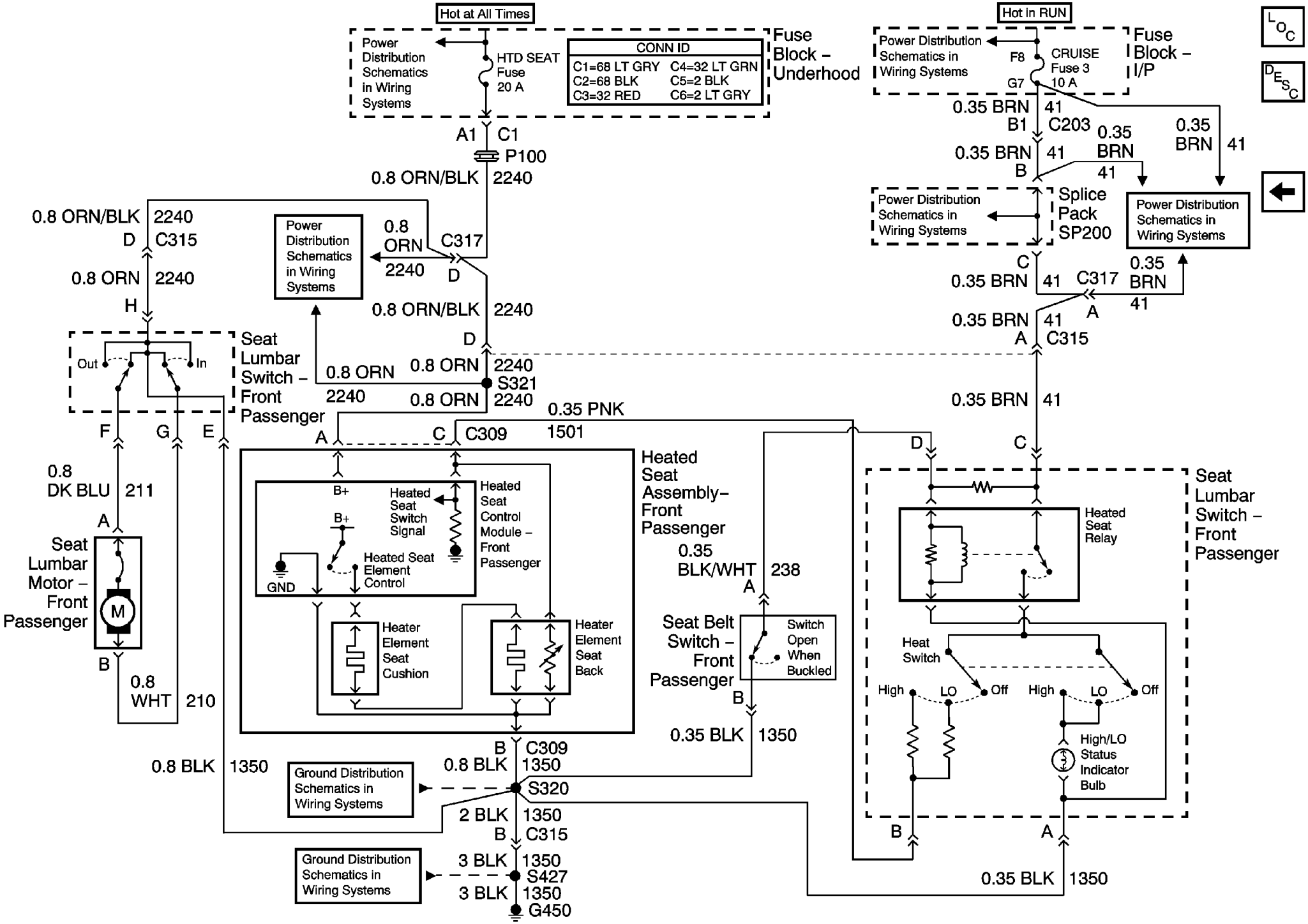
Hot at All Times
Power Distribution Schematics in Wiring Systems
HTD SEAT Fuse 20 A
CONN ID
C1=68 LT GRY C4=32 LT GRN
C2=68 BLK C5=2 BLK
C3=32 RED C6=2 LT GRY
Fuse Block – Underhood
A1 C1
P100
0.8 ORN/BLK 2240
Hot in RUN
Power Distribution Schematics in Wiring Systems
F8
CRUISE Fuse 3 10 A
G7
Fuse Block – I/P
0.35 BRN 41
B1 C203
0.35 BRN 41
B
0.35 BRN 41
0.35 BRN 41
Power Distribution Schematics in Wiring Systems
Splice Pack SP200
Power Distribution Schematics in Wiring Systems
C
0.35 BRN 41 C317
0.35 BRN 41
A
0.35 BRN 41
A C315
0.8 ORN/BLK 2240
D C315
0.8 ORN 2240
H
Power Distribution Schematics in Wiring Systems
0.8 ORN 2240
C317
D
0.8 ORN/BLK 2240
D
Seat Lumbar Switch – Front Passenger
Out
In
0.8 ORN 2240
0.8 ORN 2240
S321
0.8 ORN 2240
F G E
0.35 PNK 1501
A C C309
0.35 BRN 41
D C
0.8 DK BLU 211
A
Seat Lumbar Motor – Front Passenger
M
B
0.8 WHT 210
B+
Heated Seat Switch Signal
Heated Seat Control Module – Front Passenger
B+
Heated Seat Element Control
GND
Heater Element Seat Cushion
Heater Element Seat Back
Heated Seat Assembly– Front Passenger
0.35 BLK/WHT 238
A
Seat Belt Switch – Front Passenger
Switch Open When Buckled
B
0.35 BLK 1350
Heated Seat Relay
Seat Lumbar Switch – Front Passenger
Heat Switch
High LO Off
High LO Off
High/LO Status Indicator Bulb
B A
0.35 BLK 1350
0.8 BLK 1350
B C309
0.8 BLK 1350
Ground Distribution Schematics in Wiring Systems
S320
2 BLK 1350
B C315
Ground Distribution Schematics in Wiring Systems
3 BLK 1350
S427
3 BLK 1350
G450