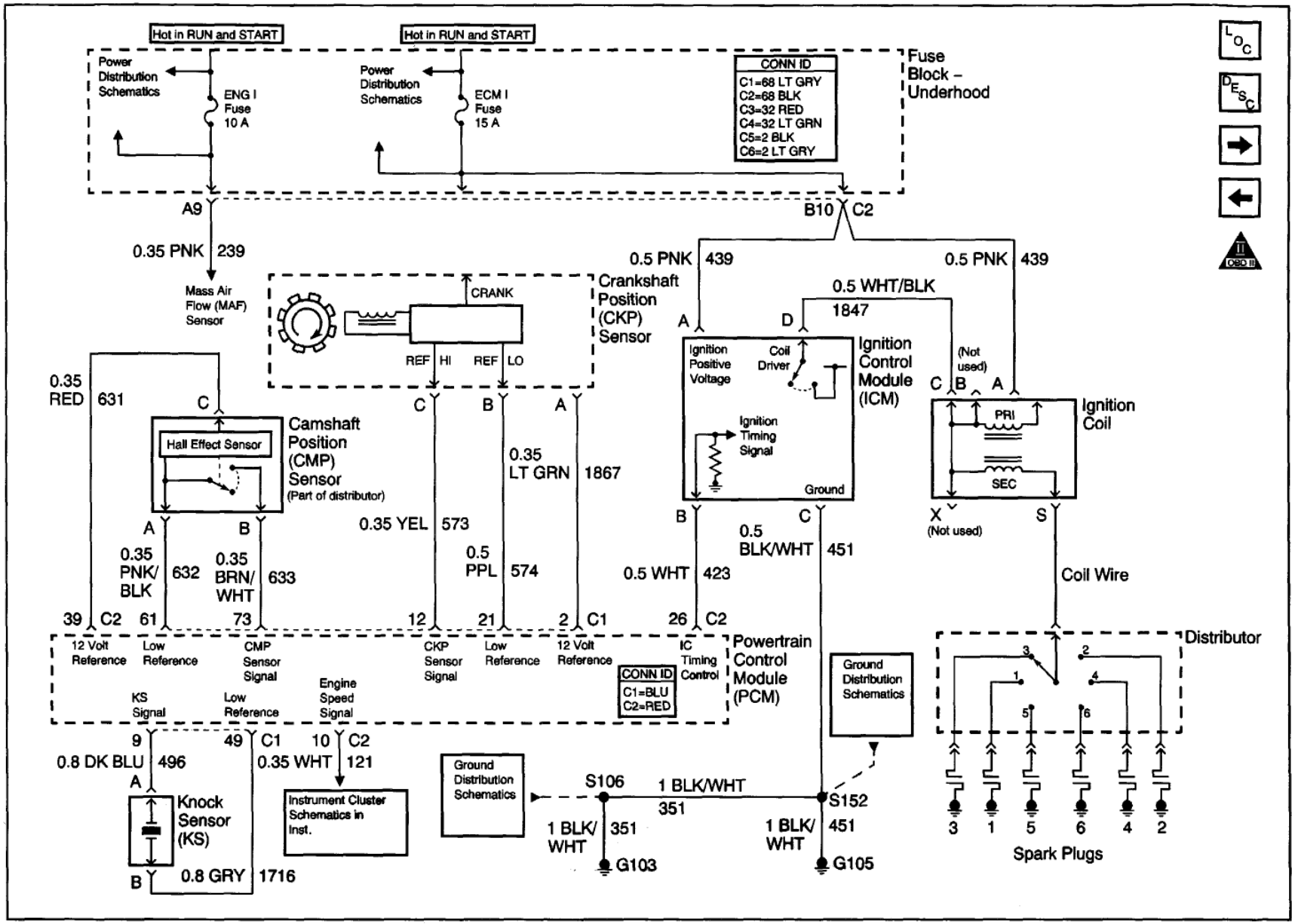Engine Controls Schematics (Ignition Controls)