SHOPKEY.PRO

YMMS: 1986 Chevrolet Blazer K10 Nov 24, 2019
Engine: 5.7L Eng License:
VIN: Odometer:
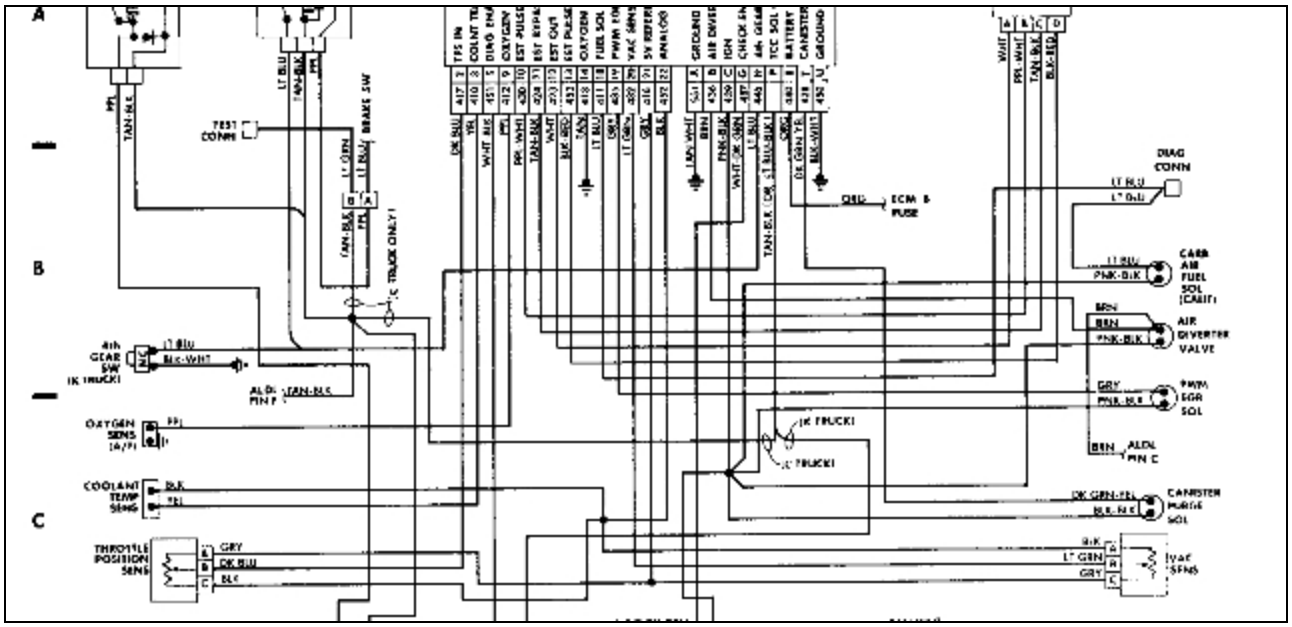
Fig 5: Engine Compartment & Underdash (Cont.)