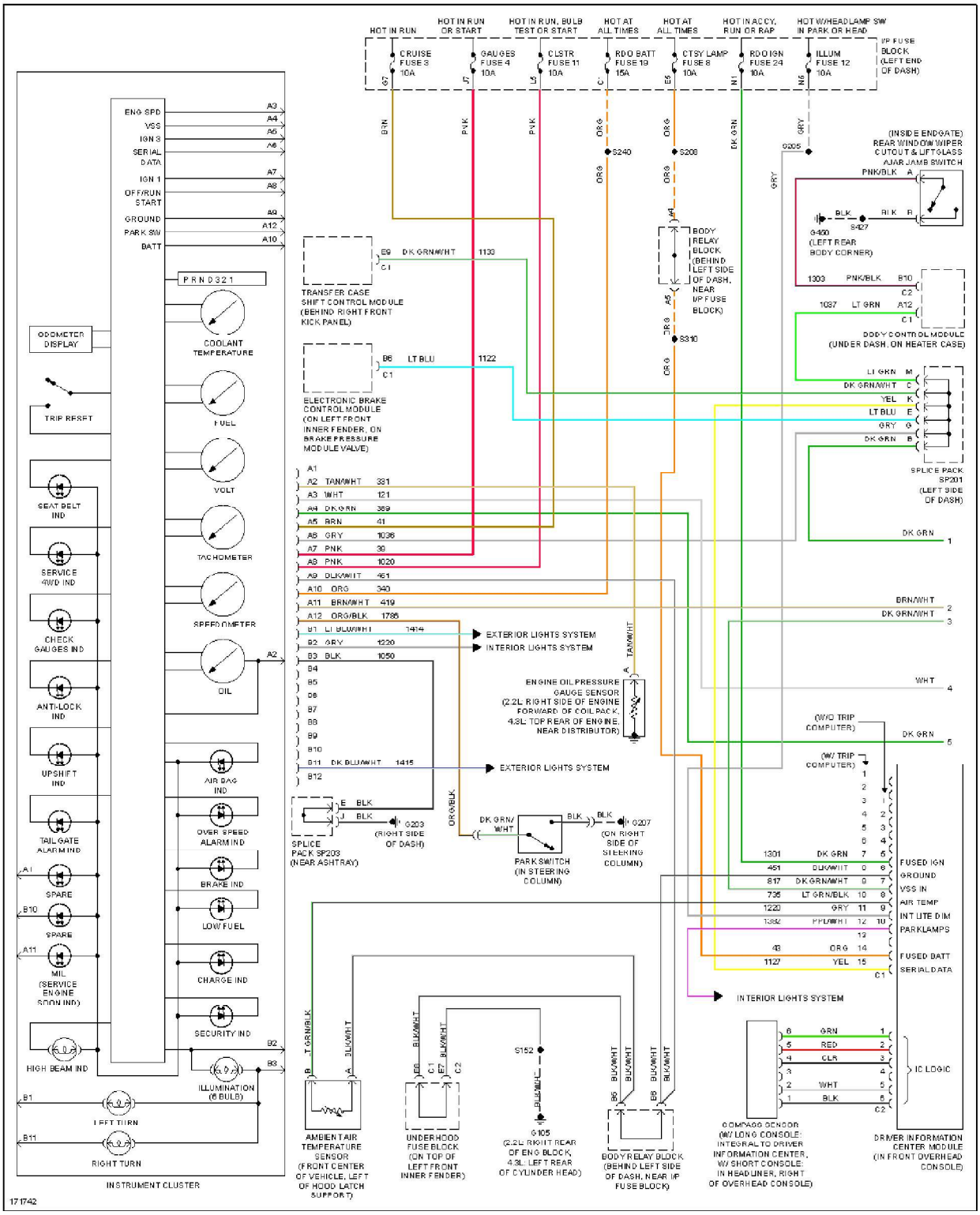

Fig. 22: Instrument Cluster Circuit (1 of 2)