Fig. 51: 4.3L VIN W, A/T Circuit, 4L60-E

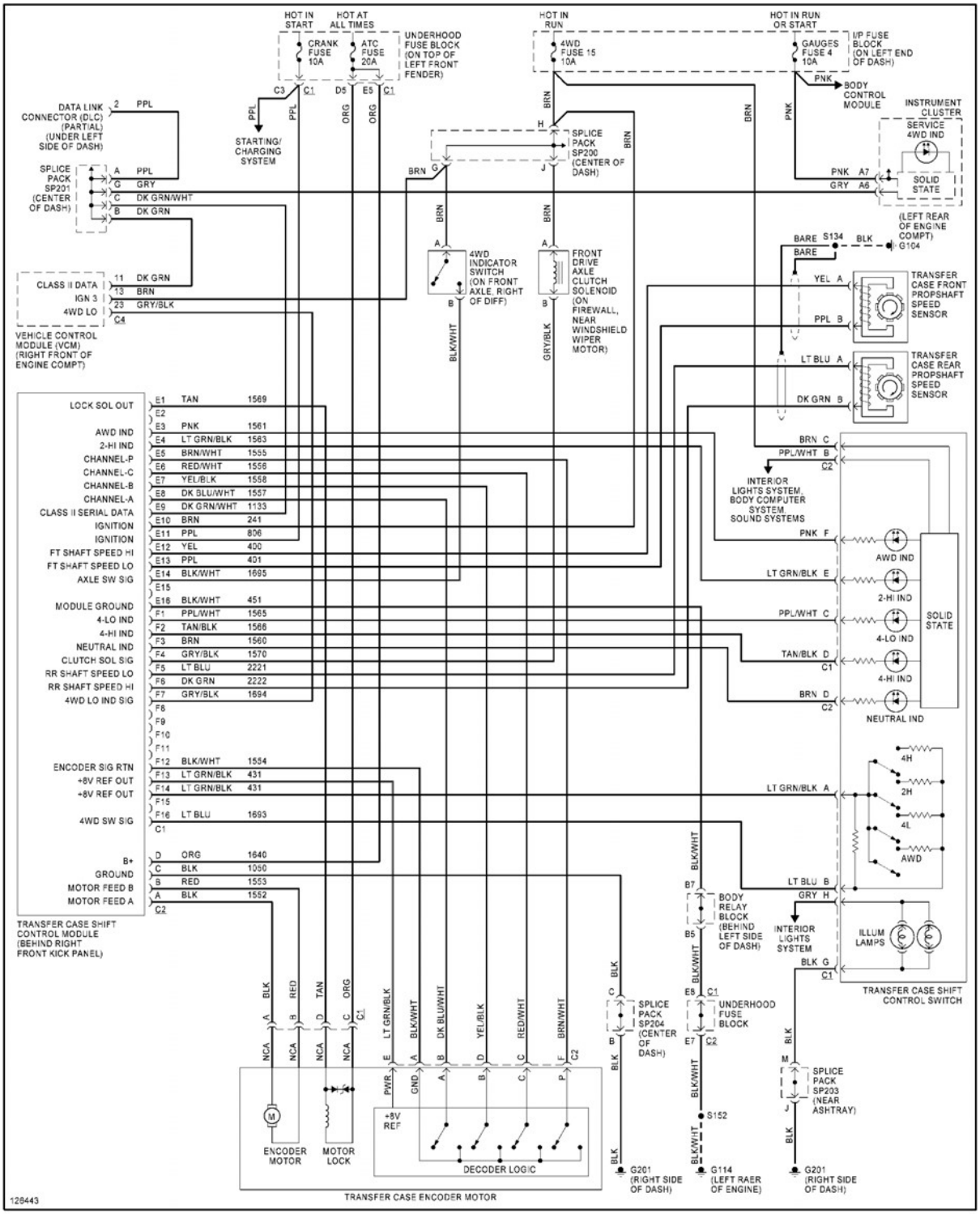

Fig. 52: 4WD Circuit, W/ 2-Speed Automatic Transfer Case