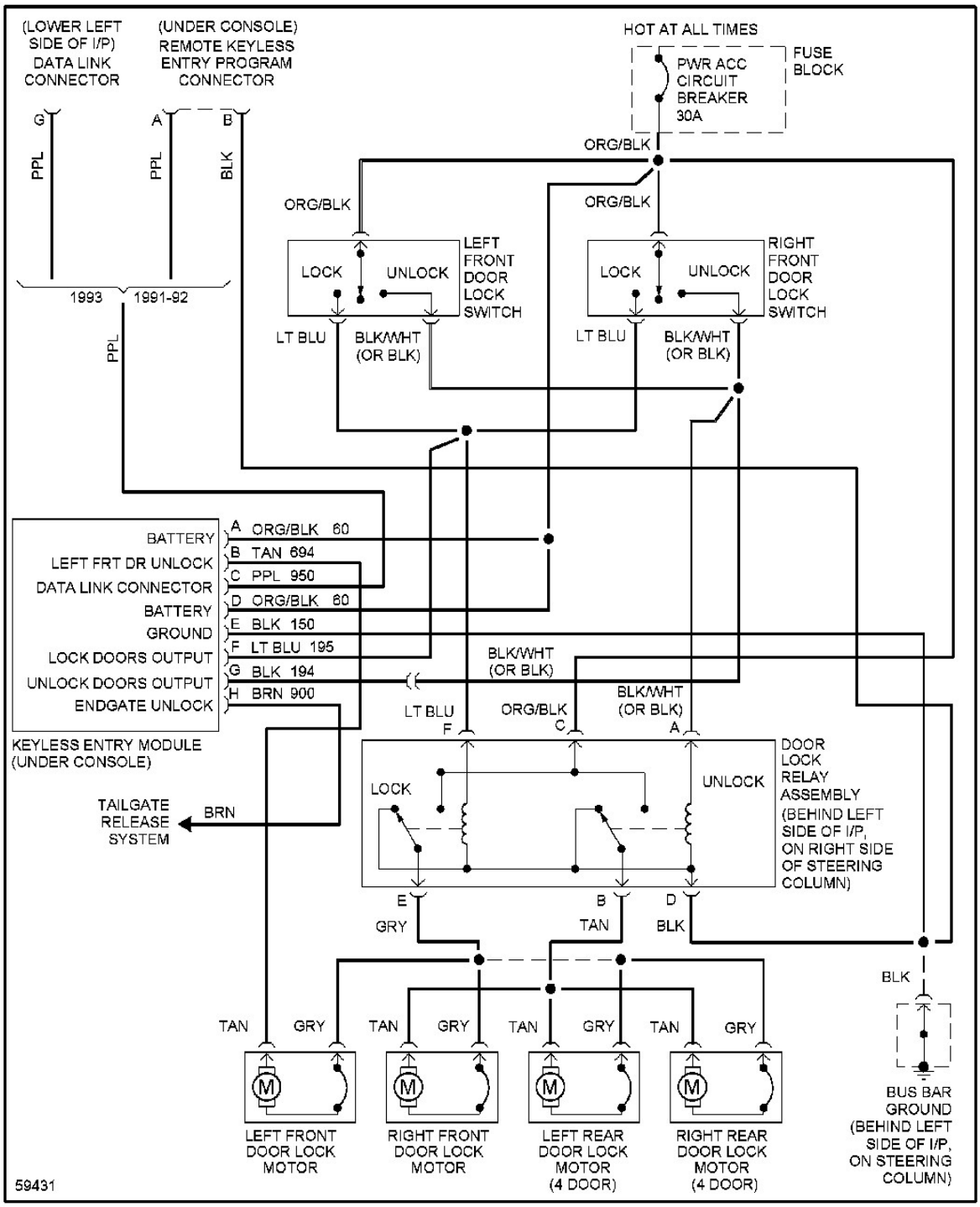

Fig. 3: Keyless Entry Circuit