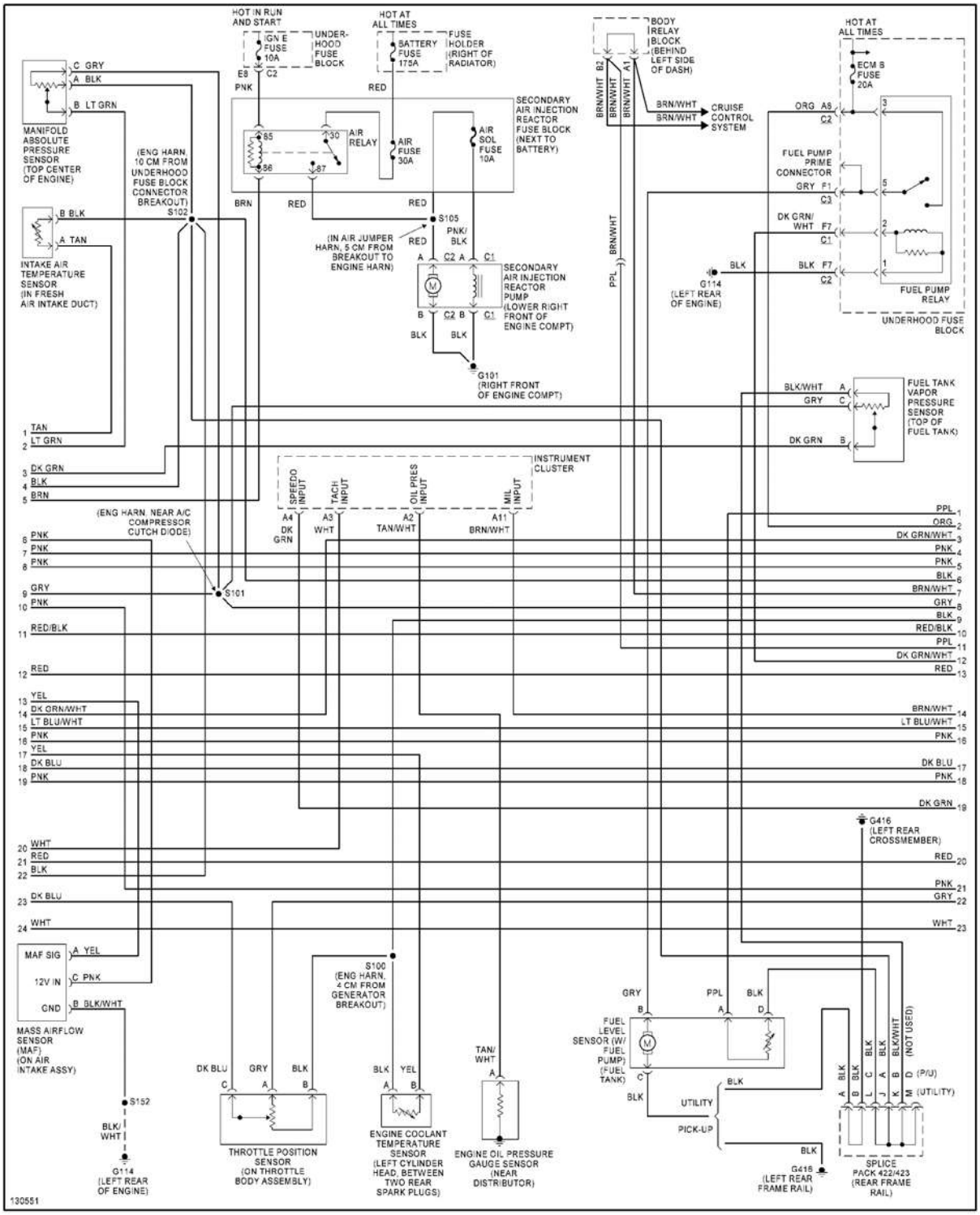

Fig. 16: 4.3L VIN W, Engine Performance Circuits (3 of 4)