Document ID# 598791
2000 GMC Truck Jimmy - 4WD

FIGURE Front Door Jamb and Door Handle Switches(c)

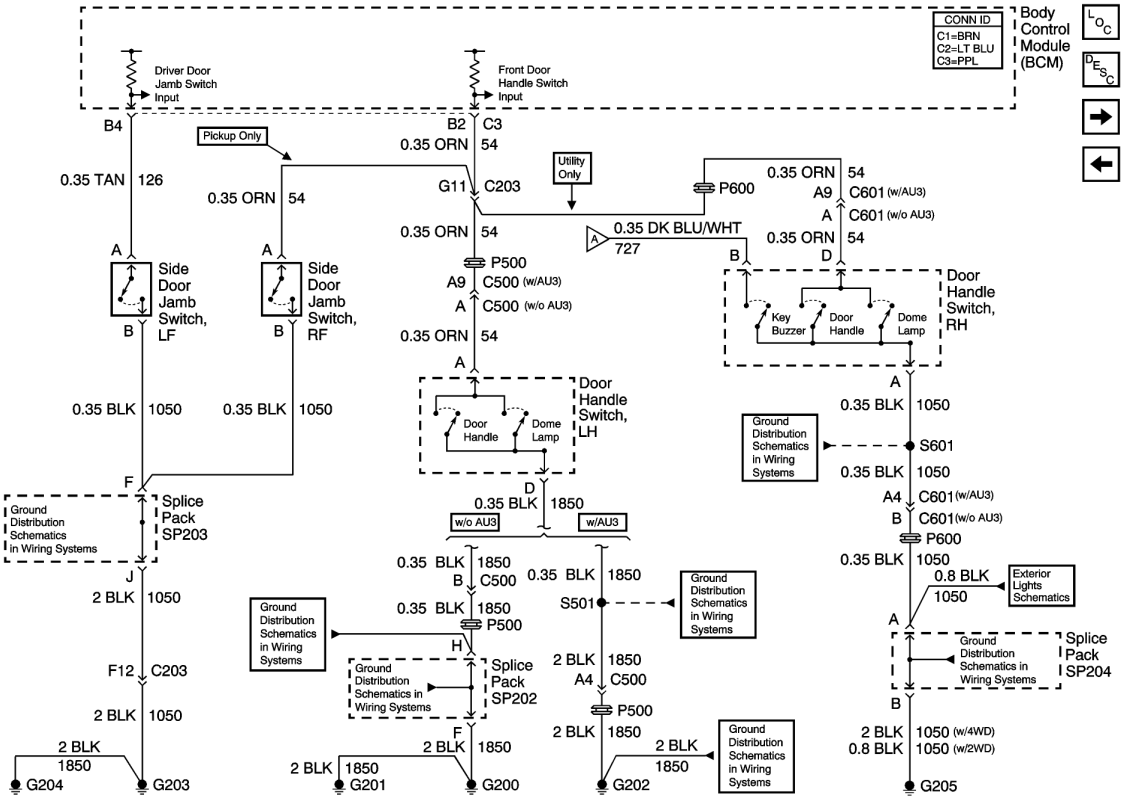

Document ID# 598791
2000 GMC Truck Jimmy - 4WD