Document ID# 537905
2000 GMC Truck Jimmy - 4WD

FIGURE Inadvertent Power Relay(c)

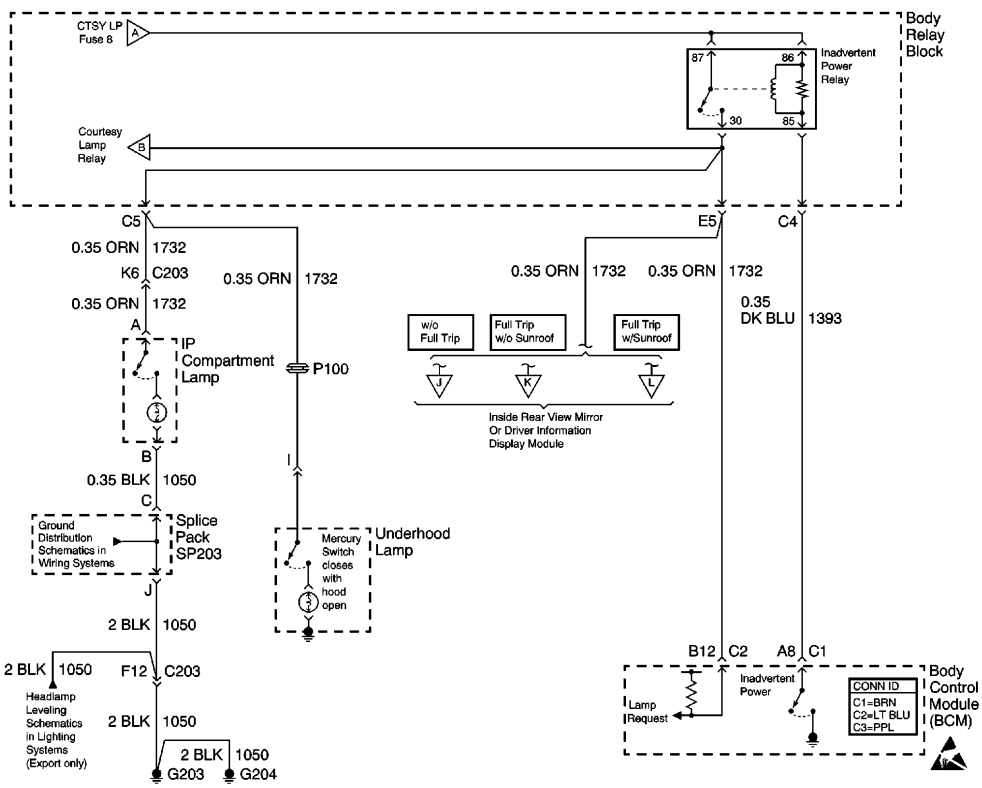

Document ID# 537905
2000 GMC Truck Jimmy - 4WD