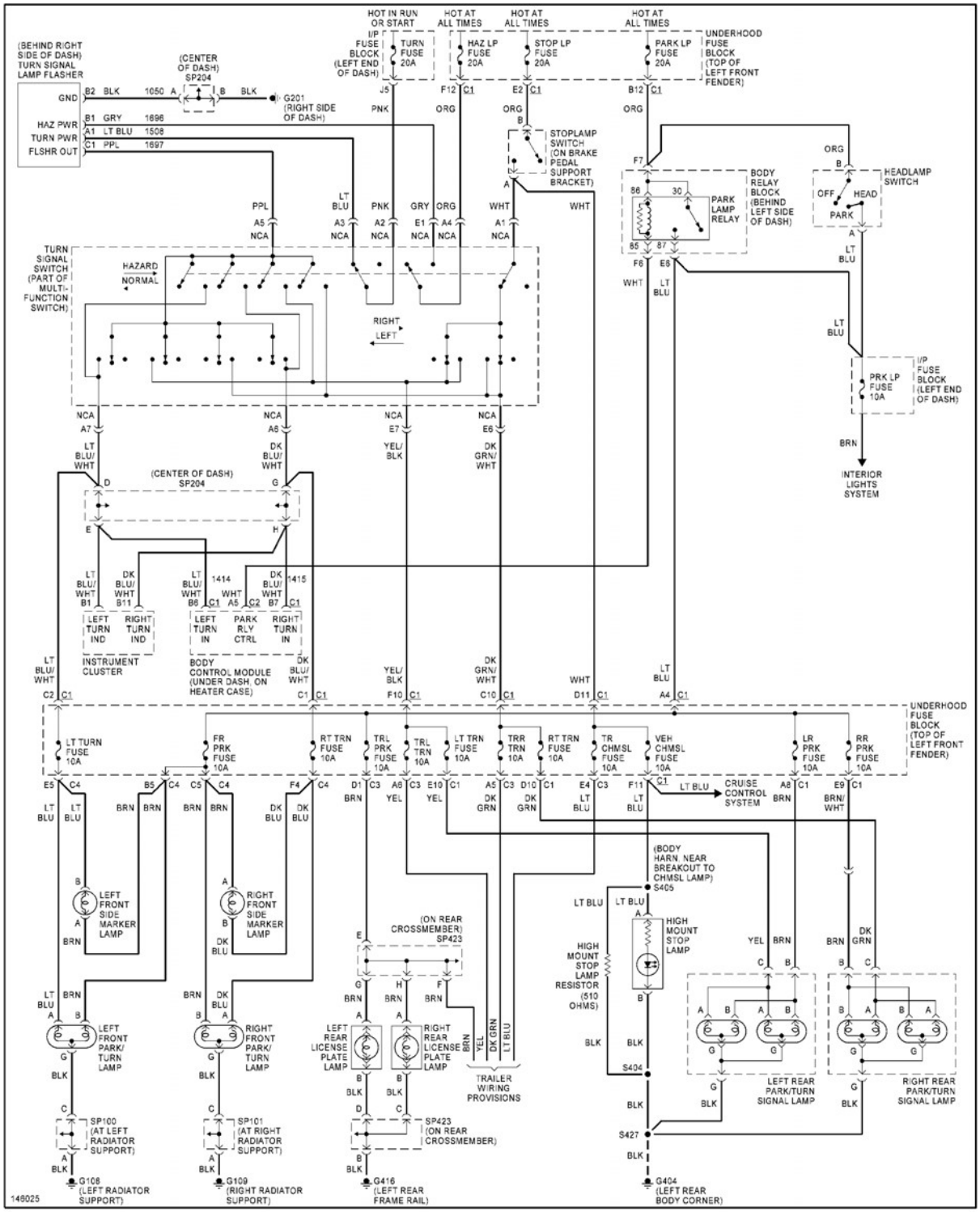

Fig. 19: Exterior Lamps Circuit

GROUND DISTRIBUTION