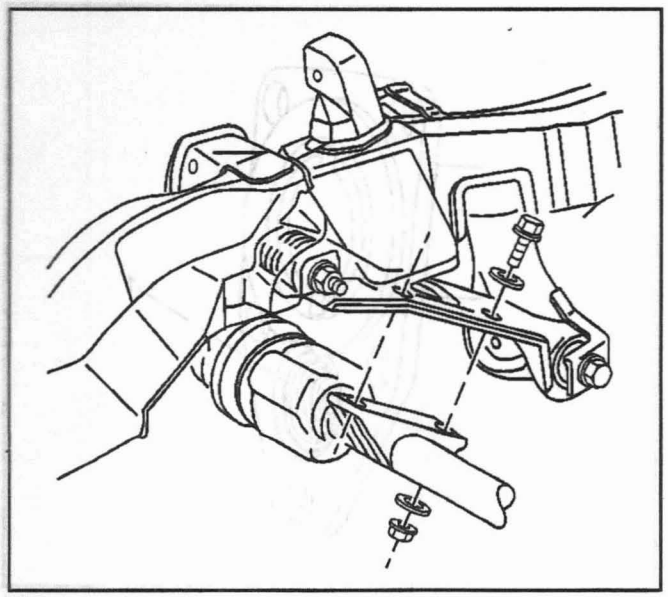

6834

Inner Axle Housing Shaft and Housing Replacement (Except Bravada)

Removal Procedure

Important: Observe and accurately reference mark the positions of all driveline components relative to the propeller shaft prior to disassembly. These components include the propeller shafts, drive axles, pinion flange, inner axle shafts, etc. Reassemble all components in the exact relationship the components had to one another prior to disassembly. Follow the specifications, torque values and any measurement made prior to disassembly in order to maintain the factory system balance of the driveline components. System balance provides a smoother running driveline operation.

1. Raise the vehicle. Refer to *Lifting and Jacking the Vehicle* in General Information.
2. Position a drain pan under the inner axle shaft housing.
3. Remove the right side wheel drive shaft. Refer to *Wheel Drive Shafts Replacement* in Wheel Drive Shafts.
4. Remove the five axle shaft housing to carrier bolts.
5. Remove the shift cable housing assembly from the carrier.
6. Remove the two axle shaft housing to frame bracket bolts, nuts and washers.

Important: Do not allow the following components to fall out of the carrier assembly or become damaged:

- The thrust washers
- The clutch gear, which may remain attached to the inner axle shaft.
- The clutch sleeve
- The clutch shaft

7. Remove the inner axle shaft and housing assembly from the carrier.
8. Remove the inner axle shaft from the housing.
   - 8.1. Hold the housing in a vise by the carrier mounting flange.
   - 8.2. Tap out the shaft using a soft mallet.
   - 8.3. Separate the inner axle shaft and the clutch gear, if necessary.
9. Inspect the following components for wear:
   - The inner axle shaft pilot and the clutch shaft pilot bearing
   - The inner axle shaft seal and bearing
   - The shift cable housing seal
10. Replace as necessary. Refer to the correct procedure:
    - *Clutch Shaft Bearing Replacement*
    - *Inner Shaft Seal and Bearing Replacement*
    - *Shift Cable Housing Seal Replacement*
11. Clean the sealing surfaces of the inner axle shaft housing and the carrier with a chlorinated solvent.

Installation Procedure

Tools Required

J 33798 Hub Engagement Tool

1. Apply a bead of sealer (GM P/N 12345739 or equivalent) to the carrier sealing surface.
2. Install the inner axle shaft into the housing.
3. Ensure that the following components are in place in the carrier assembly:
   - The thrust washers
   - The clutch shaft
   - The clutch sleeve
   - The clutch gear
4. Install the clutch gear thrust washer to the housing as shown. Use grease in order to hold the washer in place.
5. Install the axle shaft and housing assembly to the carrier.
6. Install the axle shaft housing to carrier bolt at the 1 o'clock position. Tighten the bolt finger tight.
7. Position the shift cable housing on the axle housing to carrier flange.

Notice: Refer to *Fastener Notice* in Cautions and Notices.

8. Pull the axle shaft and housing assembly down in order to install the remaining bolts.

   Tighten

   Tighten the five bolts to 48 N·m (36 lb ft).
9. Install the two axle shaft housing to frame bracket bolts, nuts and washers.

   Tighten

   Tighten the nuts to 98 N·m (72 lb ft).

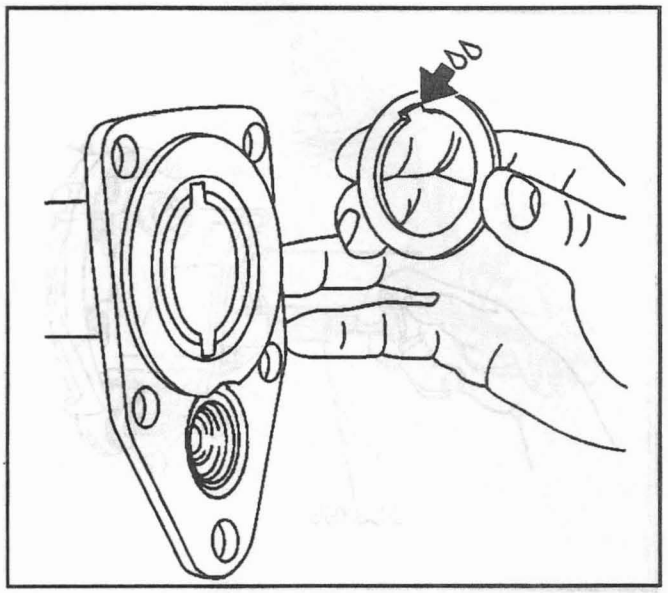

7797

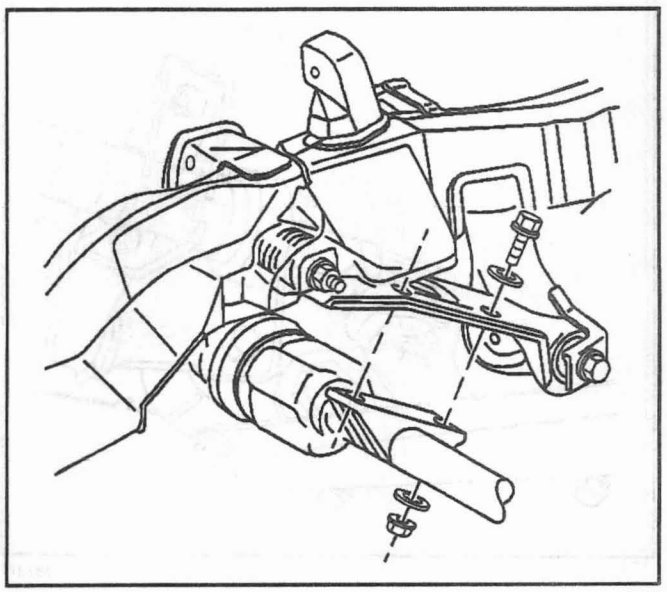

6834

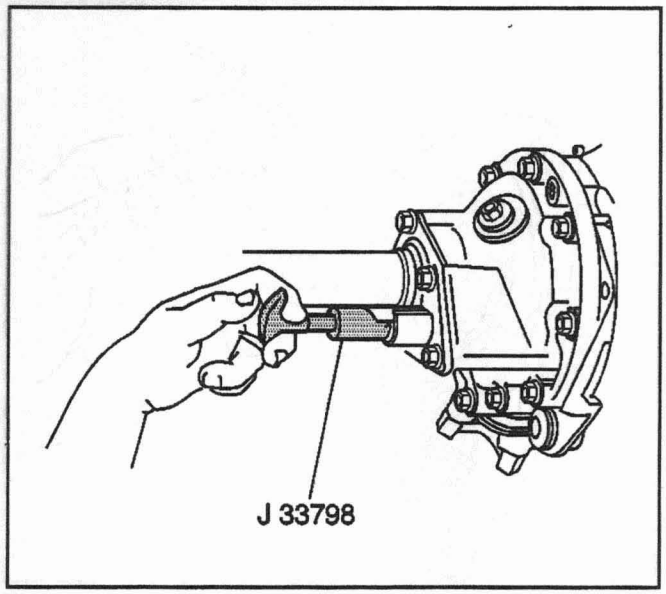

382657

10. Inspect the operation of the shift mechanism. Use *J 33798*. Insert the tool into the shift fork. Inspect for rotation of the axle shaft.
11. Install the shift cable and indicator assembly to the shift cable housing.
12. Install the right side wheel drive axle. Refer to *Wheel Drive Shafts Replacement* in Wheel Drive Shafts.
13. Inspect the axle lubricant level and add as needed. Use the proper fluid. Refer to *Lubrication Specifications*.
14. Lower the vehicle.

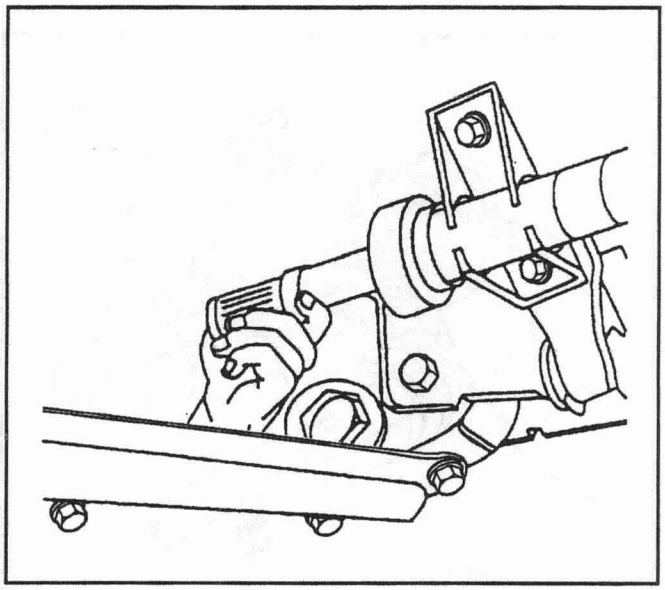

161377

Inner Axle Housing Shaft and Housing Replacement (Bravada)

Removal Procedure

Important: Observe and accurately reference mark the positions of all driveline components relative to the propeller shaft prior to disassembly. These components include the propeller shafts, drive axles, pinion flange, inner axle shafts, etc. Reassemble all components in the exact relationship the components had to one another prior to disassembly. Follow the specifications, torque values and any measurement made prior to disassembly in order to maintain the factory system balance of the driveline components. System balance provides a smoother running driveline operation.

1. Raise the vehicle. Refer to *Lifting and Jacking the Vehicle* in General Information.
2. Position a drain pan under the inner axle shaft housing.
3. Remove the right wheel drive shaft. Refer to *Wheel Drive Shafts Replacement* in Wheel Drive Shafts.

Important: Be careful not to damage the seal surface when pulling the splined shaft through the seal.

4. Remove the right inner axle shaft from the housing.
   - 4.1. Protect the end of the inner axle shaft housing and the seal with a shop towel.
   - 4.2. Insert a bent screwdriver into the inner axle shaft retaining ring slot.
   - 4.3. Pry the screwdriver against the shop towel in order to disengage the inner axle shaft from the side gear.

5. Remove the two inner axle shaft housing to frame bracket bolts, nuts and washers.
6. Remove the five inner axle shaft housing to carrier bolts.
7. Remove the inner axle shaft housing.
8. Inspect the seal and bearing. Replace as necessary. Refer to *Inner Shaft Seal and Bearing Replacement.*
9. Clean the sealing surfaces of the inner axle shaft housing and the carrier with a chlorinated solvent.

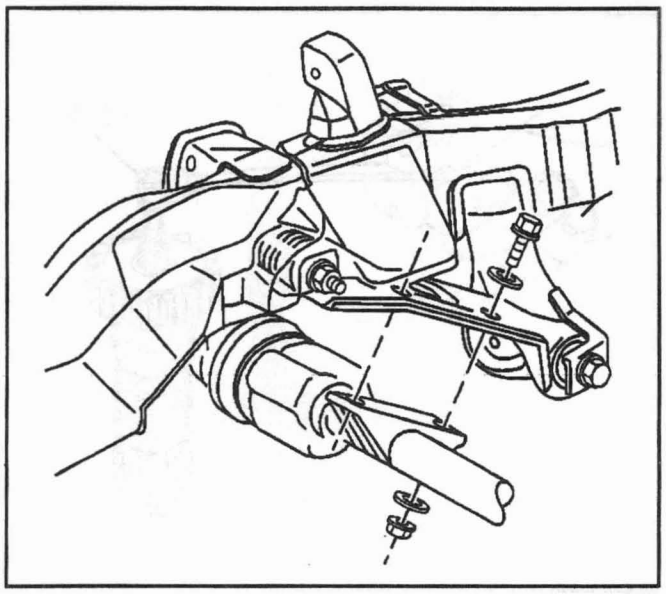

6834

Installation Procedure

Important: Reassemble all components in the exact relationship the components had to one another prior to disassembly. Follow the specifications, torque values and any measurement made prior to disassembly in order to maintain the factory system balance of the driveline components. System balance provides a smoother running driveline operation.

1. Apply a bead of sealer GM P/N 12345739 or the equivalent to the carrier sealing surface.
2. Install the inner axle shaft and the housing assembly.

Notice: Refer to *Fastener Notice* in Cautions and Notices.

3. Install the five inner axle shaft housing to the carrier assembly bolts.

   Tighten

   Tighten the bolts to 48 N·m (36 lb ft).

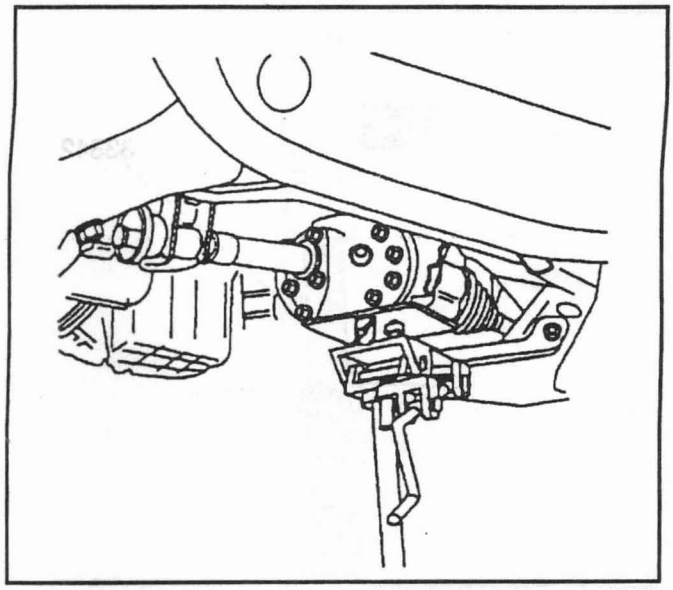

161386

4. Install the inner axle shaft housing to frame bracket bolts, nuts and washers.

   Tighten

   Tighten the nuts to 98 N·m (72 lb ft).
5. Install the right wheel drive shaft. Refer to *Wheel Drive Shafts Replacement* in Wheel Drive Shafts.
6. Inspect the axle lubricant level and add as needed. Use the proper fluid. Refer to *Lubrication Specifications.*
7. Lower the vehicle.

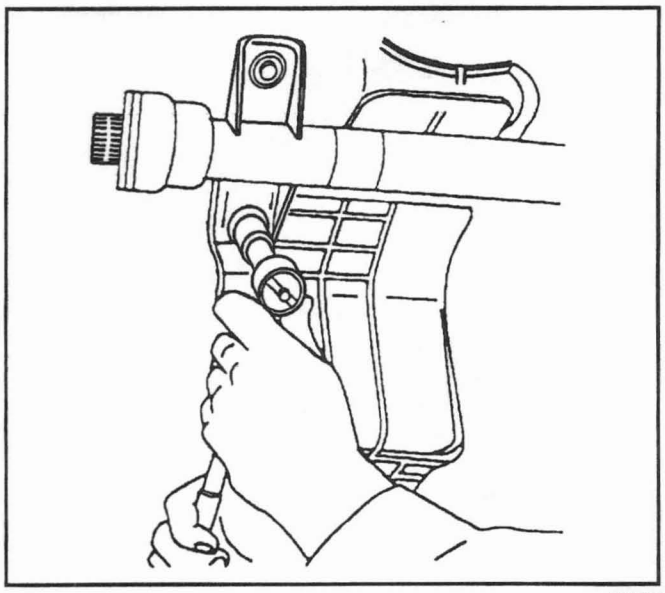

161379

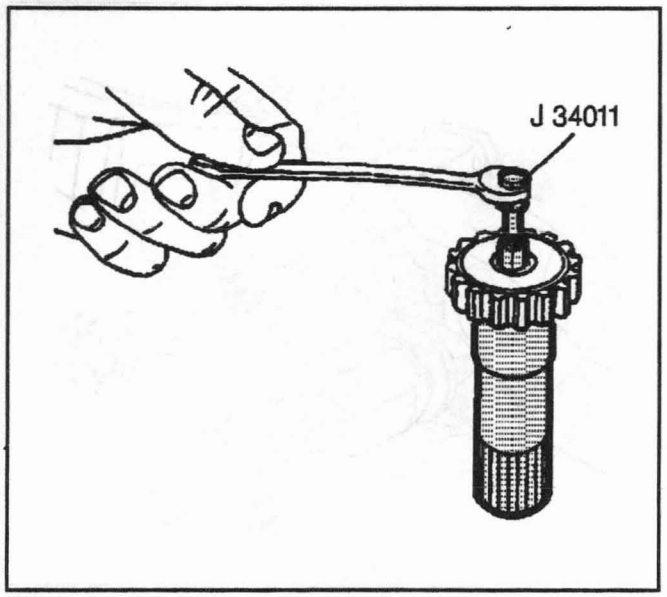

9106

Clutch Shaft Bearing Replacement

Removal Procedure

Tools Required

J 34011 Pilot Bearing Remover

1. Remove the inner axle shaft and housing assembly. Refer to *Inner Axle Housing Shaft and Housing Replacement (Except Bravada).*
2. Remove the clutch shaft from the carrier.
3. Remove the clutch shaft pilot bearing with *J 34011.*

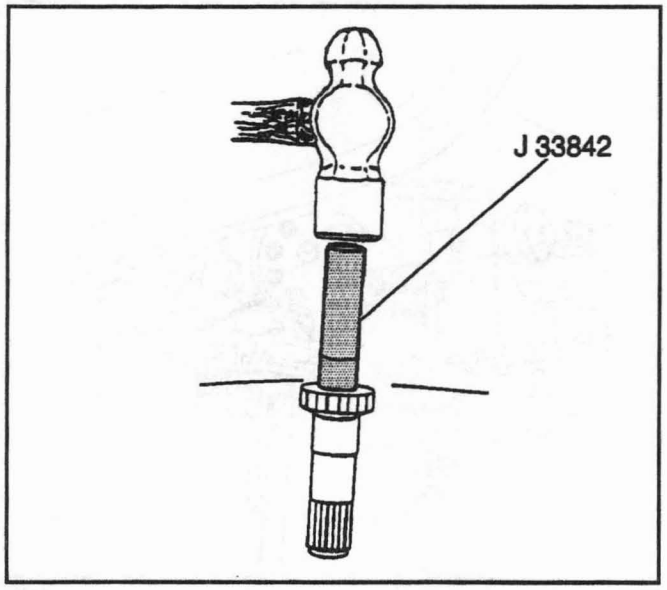

7796

Installation Procedure

Tools Required

J 33842 Pilot Bearing Installer

1. Install the clutch shaft pilot bearing using *J 33842.* Lubricate the bearing with axle lubricant, as specified in *Fluid and Lubricant Recommendations* in Maintenance and Lubrication.
2. Install the clutch shaft to the carrier.
3. Install the inner axle shaft and housing assembly. Refer to *Inner Axle Housing Shaft and Housing Replacement (Except Bravada).*

Inner Shaft Seal and Bearing Replacement

Removal Procedure

Tools Required

- *J 23907* Slide Hammer
- *J 29369-1* Universal Bearing Remover

1. Remove the inner axle shaft. Refer to *Inner Axle Housing Shaft and Housing Replacement (Except Bravada)* or *Inner Axle Housing Shaft and Housing Replacement (Bravada).*
2. Hold the inner axle shaft housing in a vise by the carrier mounting flange.
3. Remove the inner axle shaft seal using a suitable seal remover.
4. Remove the inner axle shaft bearing using the *J 29369-1* and the *J 23907.*

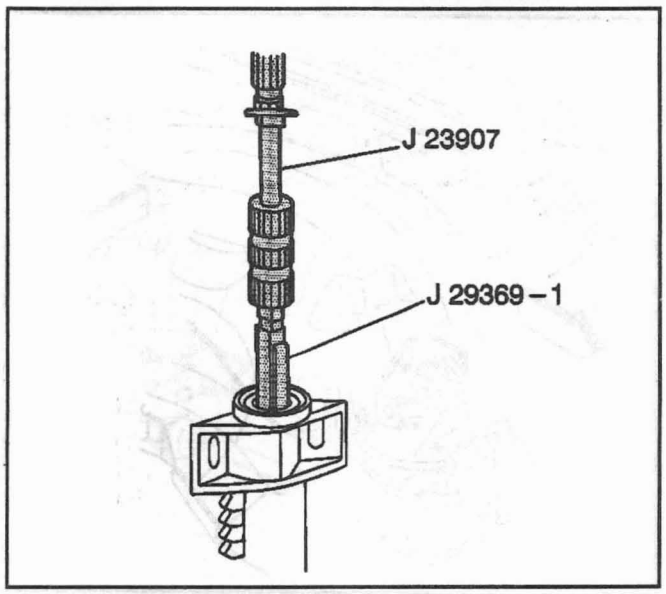

9105

Installation Procedure

Tools Required

- *J 8092* Driver Handle
- *J 23911* Seal Installer
- *J 42211* Bearing Installer

1. Place the inner axle shaft housing to carrier flange flat on a level surface.
2. Install the inner axle shaft bearing using the *J 42211* and the *J 8092.*

   The bearing is installed to the proper depth when the tool is flush with the tube end.
3. Lubricate the bearing using axle lubricant. Refer to *Fluid and Lubricant Recommendations* in Maintenance and Lubrication.

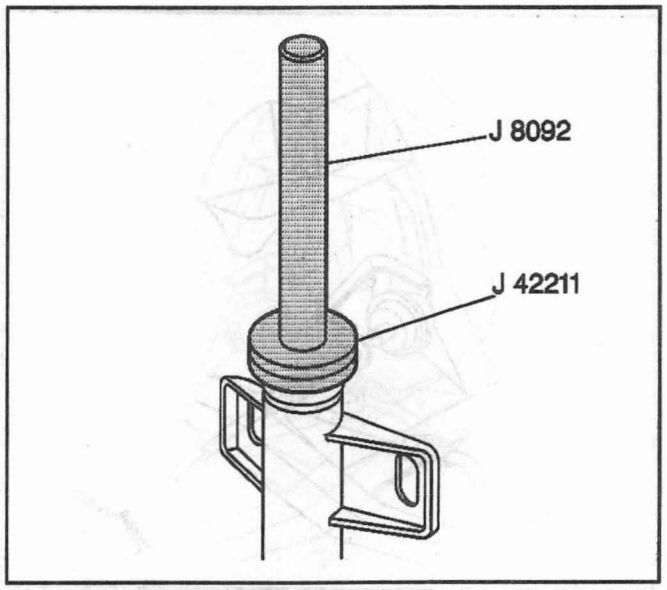

524680

4. Install the inner axle shaft seal with the *J 23911.* Drive in the seal until the seal flange is flush with the tube end.
5. Install the inner axle shaft. Refer to *Inner Axle Housing Shaft and Housing Replacement (Except Bravada)* or *Inner Axle Housing Shaft and Housing Replacement (Bravada).*

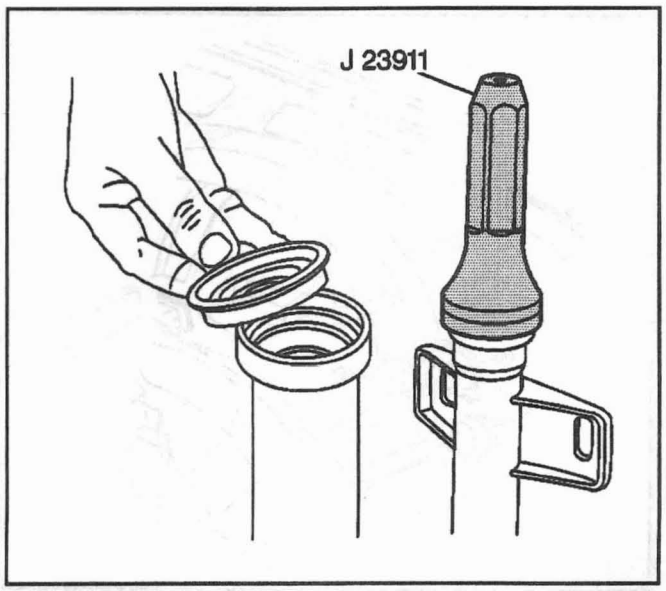

321864

Component Locator

Front Axle Components

4WD Front Drive Axle Components (Except Bravada)

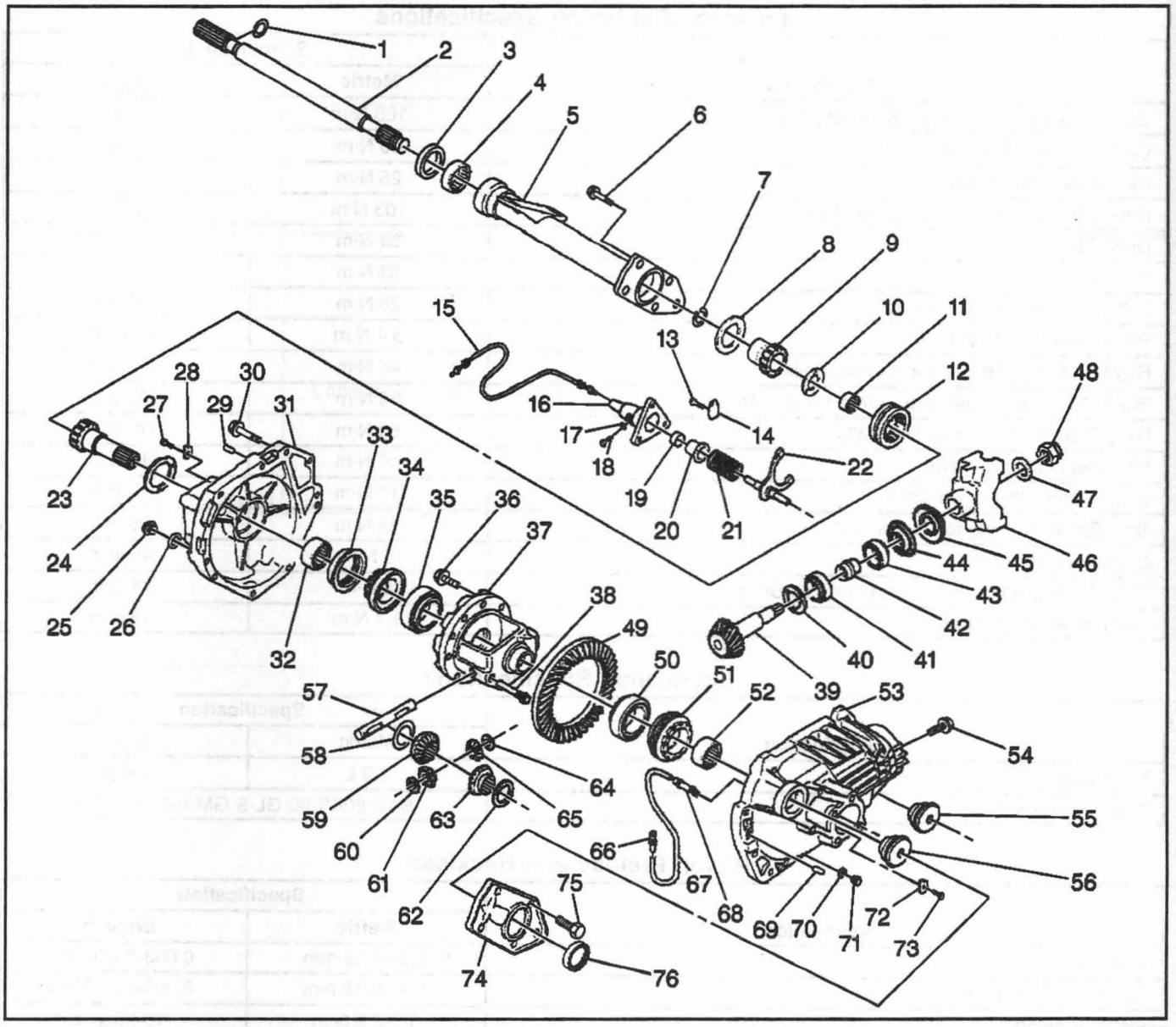

370897

Legend

(1) Retaining Ring
(2) Axle Shaft
(3) Seal
(4) Bearing
(5) Housing
(6) Bolt
(7) Retaining Ring
(8) Washer
(9) Clutch Gear
(10) Washer
(11) Bearing
(12) Clutch Sleeve
(13) Bolt
(14) Lock
(15) Cable
(16) Housing
(17) Seal
(18) Switch
(19) Outer Spring
(20) Seal
(21) Inner Spring
(22) Fork
(23) Clutch Shaft

(24) Washer
(25) Drain Plug
(26) Drain Plug Gasket
(27) Nut
(28) Nut Lock
(29) Pin
(30) Bolt
(31) Carrier
(32) Bearing
(33) Adjuster
(34) Sleeve
(35) Bearing
(36) Bolt
(37) Case
(38) Bolt
(39) Pinion Gear
(40) Shim
(41) Bearing
(42) Spacer
(43) Bearing
(44) Seal
(45) Deflector
(46) Yoke
(47) Washer
(48) Nut
(49) Ring Gear
(50) Bearing
(51) Insert
(52) Bearing
(53) Carrier
(54) Bolt
(55) Bushing
(56) Bushing
(57) Shaft
(58) Washer
(59) Side Gear
(60) Washer
(61) Pinion Gear
(62) Washer
(63) Side Gear
(64) Washer
(65) Pinion Gear
(66) Vent
(67) Hose
(68) Hose End
(69) Pin
(70) Drain Plug Gasket
(71) Drain Plug
(72) Nut Lock
(73) Nut
(74) Cover
(75) Bolt
(76) Seal